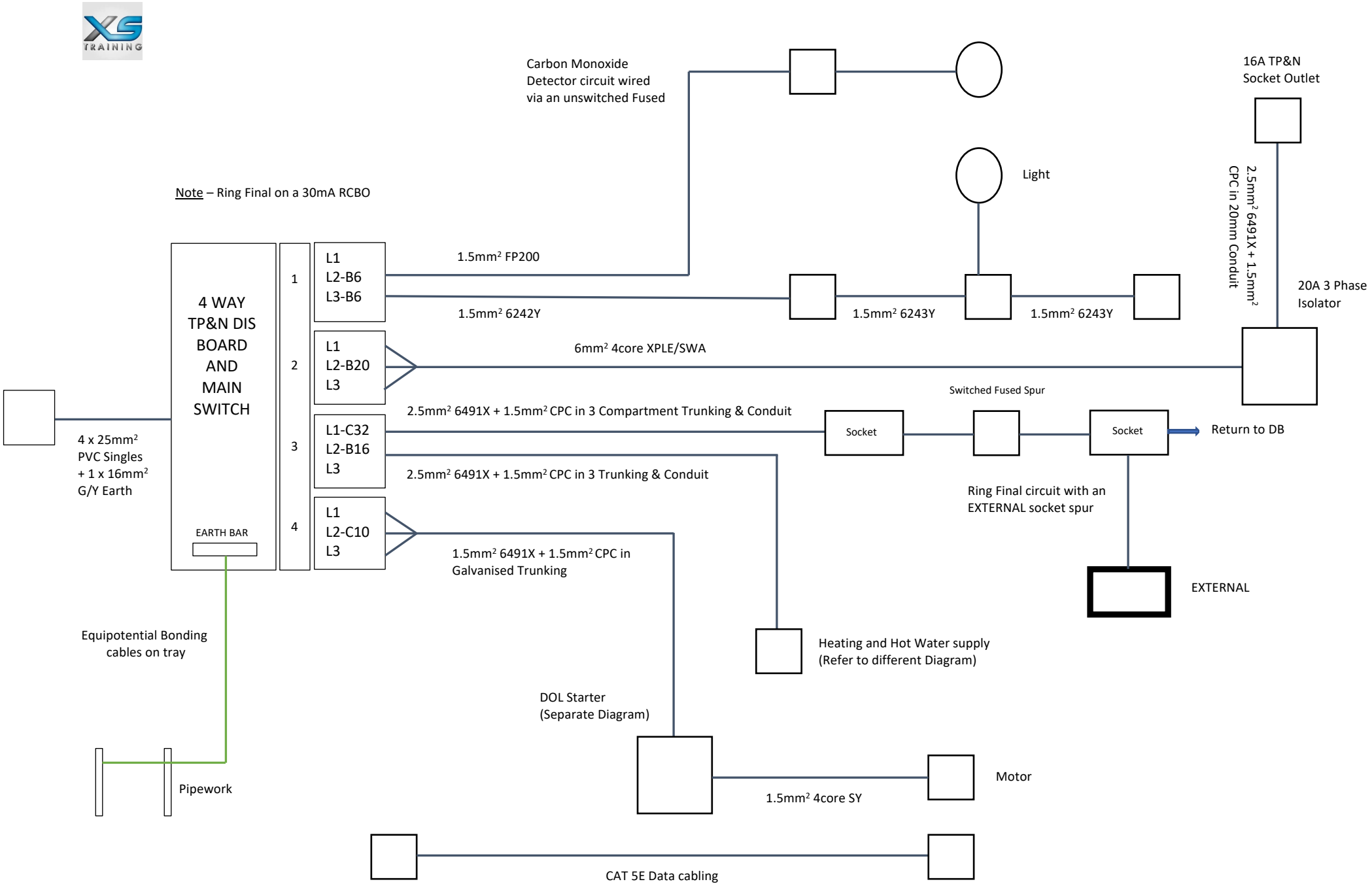

© XS Training Limited 2019